AL5001 & AL5002 Art-Net Module

(Version 1.3)

The AL5001 & AL5002 modules provide all the functionality required to interface two ports of DMX512 to the Art-Net Ethernet protocol.

The modules are small printed circuit assemblies designed to plug into a host product using a DIMM style socket. All main components are on-board and the module only requires minimal parts to be fully functional

This guide contains all the information required to integrate an AL5001 or AL5002 module into a new or existing design. For correct operation please follow the guidelines.

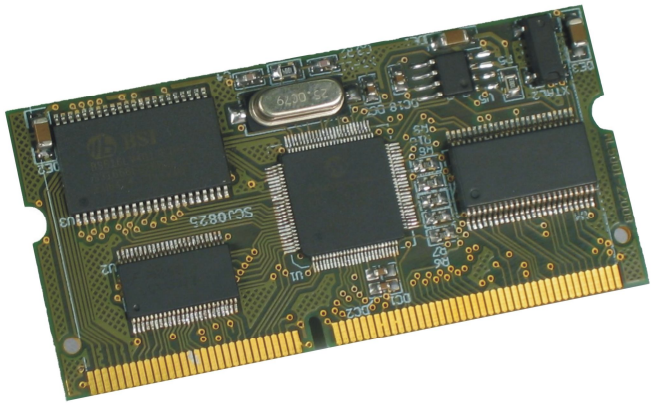

Features:

The AL5001 & AL5002 modules provide the following functionality:

- Communicates via Art-Net protocol
- Onboard 10BaseT interface, *(Ethernet transformer required)*
- Unique MAC address
- Automatic IP address generation
- Slew rate limited DMX512, simplifies EMC design considerations
- Small footprint pcb module
- Single 3V3 supply operation
- Low power
- Uses standard DIMM style connector for mounting (144 pin 0.8mm pitch)
- AL5001 supports RDM V1.0 (E1.20 - 2006 ESTA Standard)
- AL5001: Art-Net to 2 x DMX512 outputs
- AL5002: 2 x DMX512 inputs to Art-Net
- Evaluation PCB available

Benefits:

- The AL5001 & AL5002 modules allow manufacturers to support Ethernet communication with virtually no development cost
- Art-Net is a public domain standard with multi-vendor support
- Artistic Licence have developed a range of modules to suite numerous key product styles
- Both modules will support the ESTA E1.31 & E1.33 standard when approved

CE Compliance:

The AL5001/2 module is CE compliant when installed in a shielded and earthed metal case.

Copyright © Artistic Licence Engineering Ltd. All rights reserved.

AL5001 & AL5002 Module Block Diagram:

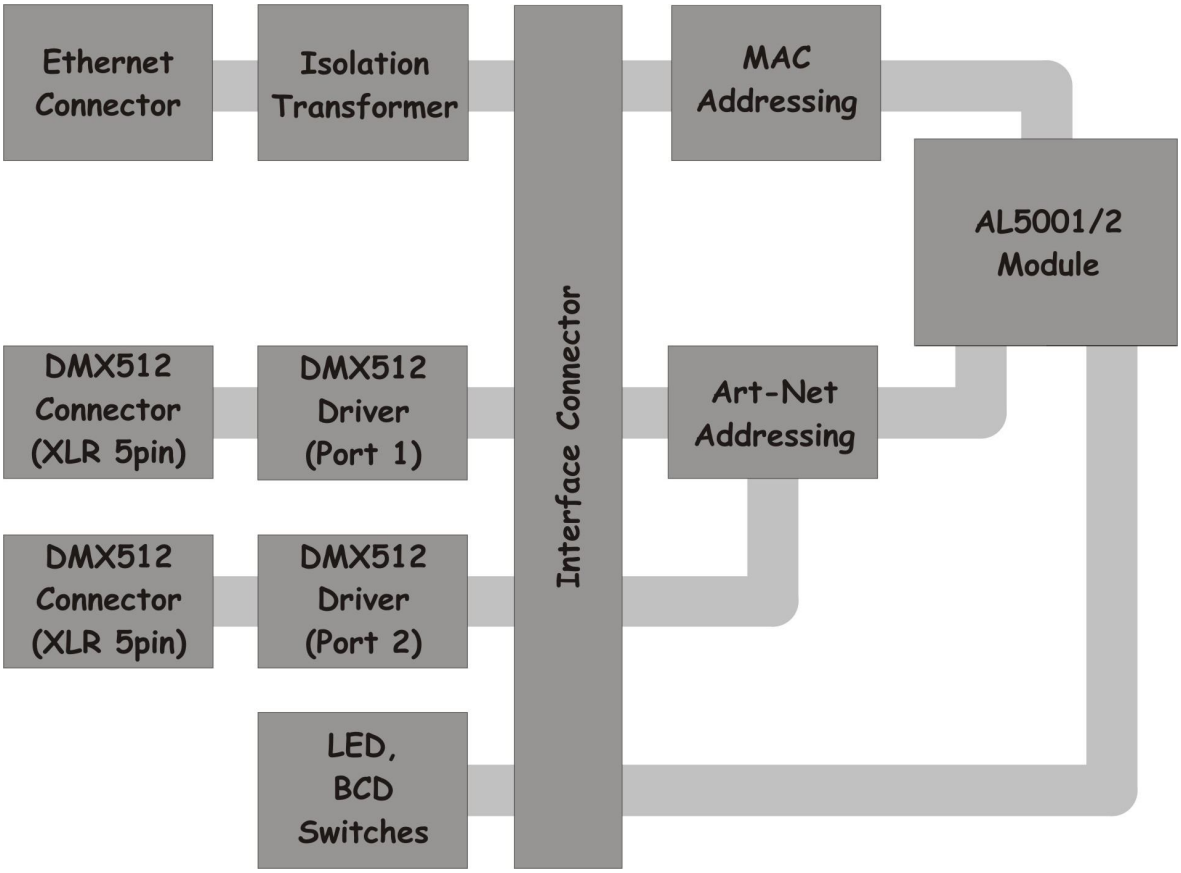

AL5001:

An AL5001 module receives Art-Net packets and transmits two DMX512 universes that also supports RDM V1.0 (E1.20 - 2006 ESTA Standard)

AL5002:

An AL5002 module accepts two DMX512 inputs and converts this data to Art-Net and transmits it via the Ethernet connection

General:

The two modules require the following components to be fully functional:

- +3V3 DC
- RJ45 Connector, Ethernet Transformer, Isolation network
- DMX drivers and connectors
- De-Coupling Capacitors
- DIMM Style connector
- 9 Jumpers (and protection diodes)
- BCD Switches
- Indicator LED's

Please refer to the diagram for more information on the interconnection of the module

When laying out the PCB it is very important that the decoupling capacitors are placed close to the pins of the connector to ensure noise is reduced on the 3V3 supply.

Pin Functions:

Pins	Net	Description	Notes
Power Pins			
1, 55, 61, 73, 75, 78, 94, 105, 107, 109, 115, 125, 141, 144	+3V3	Connect to a stable 3V3 DC Power supply	Ripple must be 50mA peak-to-peak or less, *(please see notes regarding decoupling capacitors)*
0, 2, 7, 13, 57, 77, 79, 80, 88, 90, 92, 95, 104, 110, 117, 118, 139, 143	GND	Connect to the GND of the PSU	
Ethernet Pins			
3	RXN0	Ethernet Receive - line	Connect to pin 6 of RJ45 connector via Ethernet Transformer
5	RXP0	Ethernet Receive + line	Connect to pin 3 of RJ45 connector via Ethernet Transformer
9	TXN0	Ethernet Transmit - line	Connect to pin 2 of RJ45 connector via Ethernet Transformer
11	TXP0	Ethernet Transmit + line	Connect to pin 1 of RJ45 connector via Ethernet Transformer
DMX Pins			
93	DMX-RX1	Receive line from DMX port 1	
91	DMX-TX1	Transmit line from DMX port 1	
89	DMX-RXE1	Receive enable for DMX port 1	
91	DMX-TXE1	Transmit enable for DMX port 1	
103	DMX-RX2	Receive line from DMX port 2	
101	DMX-TX2	Transmit line from DMX port 2	
99	DMX-RXE2	Receive enable for DMX port 2	
97	DMX-TXE2	Transmit enable for DMX port 2	
LED Indicators			
130	LED-PWR	Control pin for Power LED	
128	LED-COMM	Control pin for Communication LED	
124	LED-DATA1	Control pin for DMX Port 1	
126	LED-DATA2	Control pin for DMX Port 2	
BCD Sub-Net & Universe Switches			
138	BCD1	Sub-Net and Universe Switch lines	
137	BCD2	Sub-Net and Universe Switch lines	
136	BCD4	Sub-Net and Universe Switch lines	
135	BCD8	Sub-Net and Universe Switch lines	
134	BCDA	Sub-Net and Universe Switch lines	
133	BCDB	Sub-Net and Universe Switch lines	
132	BCDC	Sub-Net and Universe Switch lines	
106	JPA	Jumper Switch lines	
108	JPB	Jumper Switch lines	
Misc			
82	SW0	Switch Select control lines	Please refer to circuit diagram
84	SW1	Switch Select control lines	Please refer to circuit diagram
62	ROM BOOT	Rom Boot jumper	

Notes

1) There should be a 100nF Ceramic Cap connected between each +3V3 pin of the module and GND

2) There shall also be at least 5 Decoupling 22uF Electrolytic Caps connected to the supplied 3V3 and GND

AL5001 & AL5002 Evaluation PCB: (This circuit diagram is available to download as App Note 43)

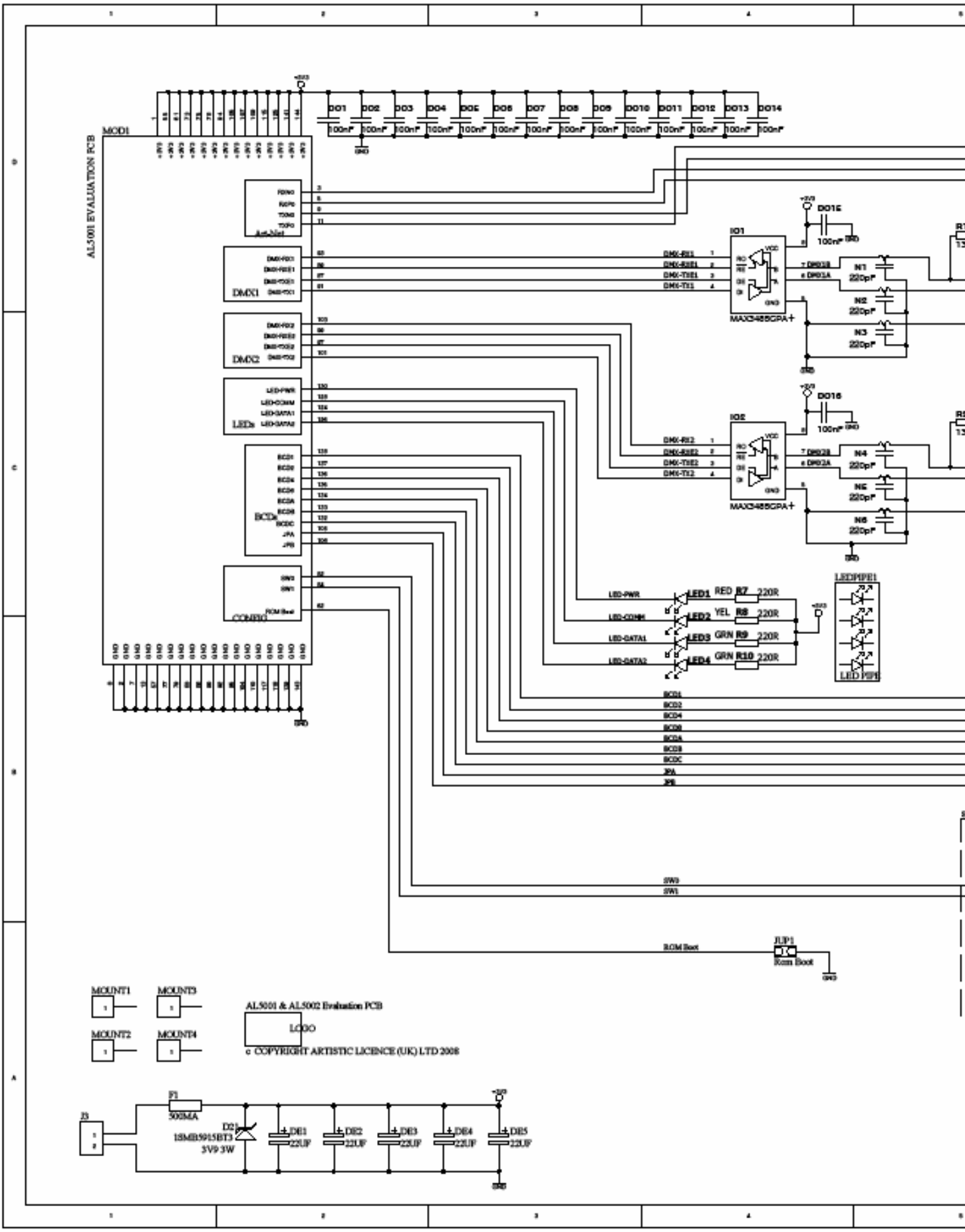

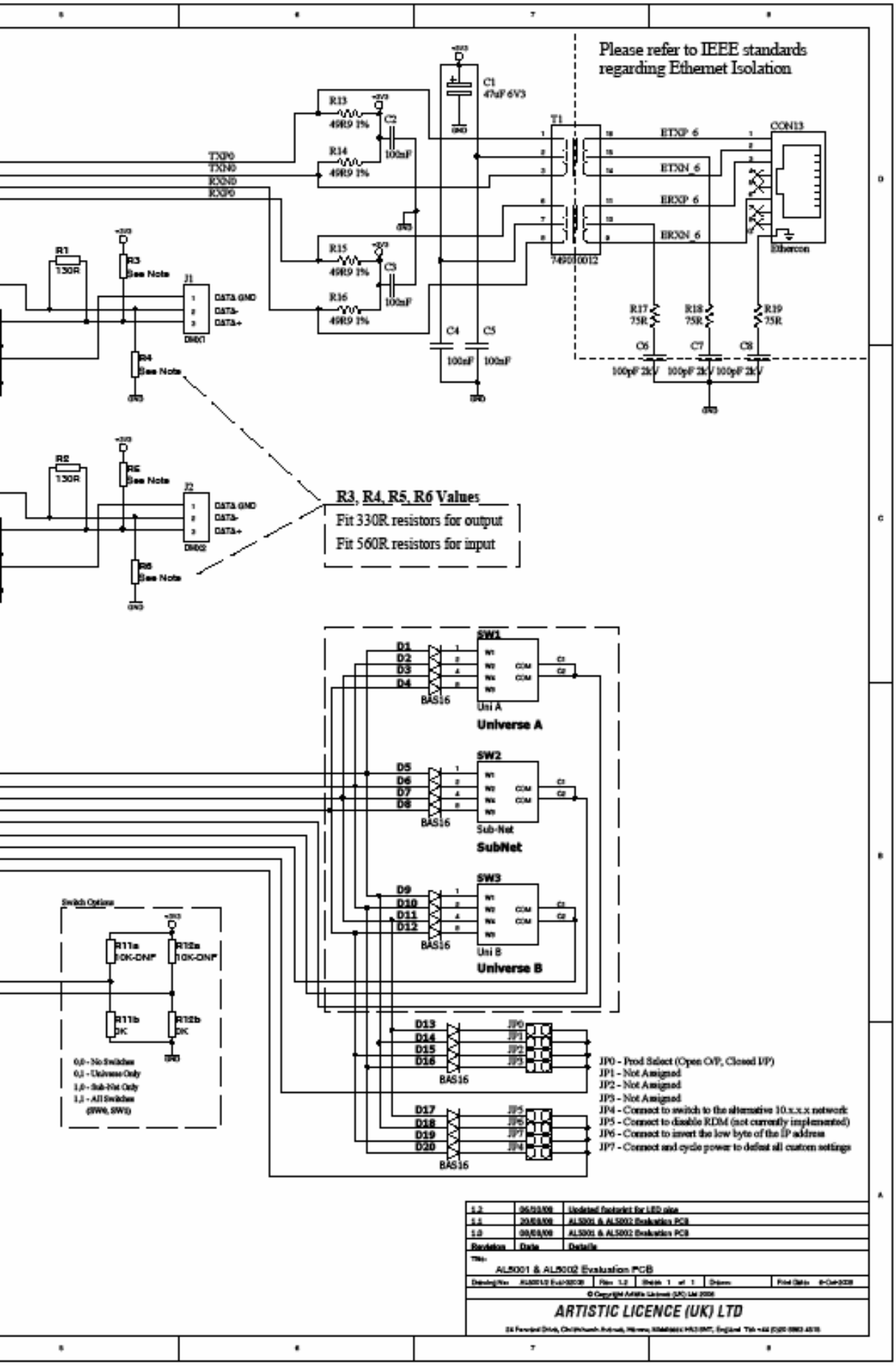
Please refer to IEEE standards regarding Ethernet Isolation
C1 47uF 6V3
R13 49R9 1%
R14 49R9 1%
R15 49R9 1%
R16 49R9 1%
C2 100nF
C3 100nF
C4 100nF
C5 100nF
T1
749010012
CON13
Ethercon
ETXP_6
ETXN_6
ERXP_6
ERXN_6
R17 75R
R18 75R
R19 75R
C6 100pF 2kV
C7 100pF 2kV
C8 100pF 2kV
TXP0
TXN0
RXN0
RXP0
R1 150R
R2 150R
R3 See Note
R4 See Note
R5 See Note
R6 See Note
J1
J2
DMX1
DMX2
DATA GND
DATA-
DATA+
R3, R4, R5, R6 Values
Fit 330R resistors for output
Fit 560R resistors for input
SW1
SW2
SW3
Uni A
Universe A
Sub-Net
SubNet
Uni B
Universe B
BAS16
Switch Options
R11a 10K-DNP
R12a 10K-DNP
R11b 0K
R12b 0K
0,0 - No Switches
0,1 - Universe Only
1,0 - Sub-Net Only
1,1 - All Switches (SW0, SW1)
JP0 - Prod Select (Open O/P, Closed I/P)
JP1 - Not Assigned
JP2 - Not Assigned
JP3 - Not Assigned
JP4 - Connect to switch to the alternative 10.x.x.x network
JP5 - Connect to disable RDM (not currently implemented)
JP6 - Connect to invert the low byte of the IP address
JP7 - Connect and cycle power to defeat all custom settings
Revision
Date
Details
AL5001 & AL5002 Evaluation PCB
ARTISTIC LICENCE (UK) LTD

Module Detail:

The module comes already programmed and tested so is ready to use.

The AL500x can be configured either via DMX-Workshop or the modules web-browser.

Settings such as:

- Sub-Net
- Universe
- Short/Long Name
- Indicators (mute/locate)
- IP Address
- Firmware Upload

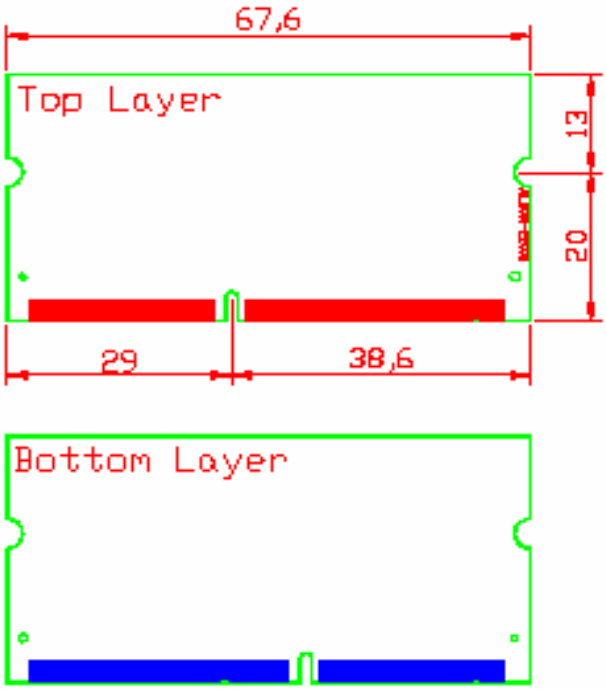

Switches:

The Universe and Sub-Net switches are fitted as standard to the module. However the following options are available:

- No switches – Sub-Net and Universe values are set via remote configuration
- Universe On-board – Sub-Net is configured via remote configuration
- Sub-Net On-board – Universe is configured via remote configuration
- Universe & Sub-Net – Switches are on-board but can also be remotely configured

To ensure correct operation SW0 and SW1 need to be connected to either 3V3 or GND depending on the switches used. Please refer to the circuit diagram

Power Requirements:

The module requires +3V3 DC voltage with a maximum ripple of 50mV. Each module requires 300mA at +3V3 DC.

Notes: The module does not offer any reverse voltage protection. This should be included on the carrier PCB

DMX Connections:

On the evaluation PCB there are two 3pin DMX connectors. The pins are labelled as to the function of each one. Please refer to the table below for connection to the XLR connectors:

XLR Pin (Convention)	Function	Colour
1	Ground	Black
2	Data -	Blue
3	Data +	Red
4	No Connection	
5	No Connection	

Jumpers:

On the Evaluation PCB there are Eight jumpers used to configure the AL5001/2 module

JP0 - Not Assigned
JP1 - Not Assigned
JP2 - Not Assigned
JP3 - Web Server disabled
JP4 - Switch to alternate 10.x.x.x network
JP5 - Connect to disable RDM
JP6 - Invert low byte of IP address
JP7 - Connect, cycle power to defeat all custom settings

Bill of Materials:

The following components are required for the evaluation PCB. Please note that some components may require modification subject to the intended application

Quantity	Designator	Part Type	Manufacturer	Part Number
1	MOD1	AL5001	Artistic Licence	AL5001
1	MOD1	Connector for AL5001	Molex	54698-7000
20	DC1 - DC16, C2 - C5	100nF Ceramic Capacitor	Generic SMD 0805	
5	DE1 - DE5	22uF 16V Electrolytic Capacitor	Generic SMD Cap (5mm diameter)	
1	D21	3V9 3W Zener Diode	On Semi	1SMB5915BT3
1	F1	500mA Polyswitch Fuse	Raychem	RXE050
1	J3	2 way Screw Terminal	Camden	CTB0108/2
2	IC1, IC2	RS485 Line Drivers	Maxim	MAX3485CPA+
6	N1 - N6	220pF T-Net Cap	Wurth	748131009
2	R1, R2	130R Resistor	Generic SMD 1206	
2	R3, R5 (AL5001)	330R 1%250mW	Generic SMD 1206	
2	R3, R5 (AL5002)	560R 1% 250mW	Generic SMD 1206	
2	R4, R6 (AL5001)	330R 1%250mW	Generic SMD 1206	
2	R4, R6 (AL5002)	560R 1% 250mW	Generic SMD 1206	
2	J1, J2	3pin Connector	JYK	P2500-03
4	R7 - R10	220R Resistor	Generic SMD 1206	
2	R11a, R12a	10K Resistor	Generic SMD 0805	
2	R11b, R12b	DNF	DNF	DNF
9	JUP1, JP0 - JP7	2pin Jumper	Generic 2mm Jumper	
20	D1 - D20	Signal Diode	Fairchild	BAS16
3	SW1 - SW3	BCD HEX Switch	Hartmann	PT65103
4	R13 - R16	49R9 Resistor	Tyco	RN73C2A49R9BTG
1	T1	Ethernet Transformer	Wurth	749010012
1	C1	47uF 6V3 Electrolytic Capacitor	Generic SMD Cap (5mm diameter)	
1	CON13	RJ45 Connector	Neutrik	NE8FAH
3	R17 - R19	75R Resistor	Generic SMD 1206	
3	C6 - C8	100pF 2kV	Phycomp	225002111536
1	LED PIPE1	4way LED pipe	Kingbright	Light-Pipe KL-05

Notes:

R3 & R5, R4 & R6 – The value of these resistors are determined by the module configuration, i.e. output or input

CE Compliance – To ensure this product is CE compliant it shall be mounted inside a suitably screened case.

Ethernet Isolation must be observed. A 1.5kV isolation gap must be observed between the Ethernet input and the rest of the circuit. Please refer to the IEEE standard for more information regarding Ethernet Isolation

There are several guidelines for Ethernet tracks:

- All data pairs must be of 'matched length'
- Route differential Tx and Rx pairs near together
- Changing layers should be avoided where possible
- Never use 90º traces, Use 45º angles or curves instead
- Distance between magnetic and RJ45 connection should be short as possible

Recommended PCB Pattern for Connector: (Molex - 54698-7000)

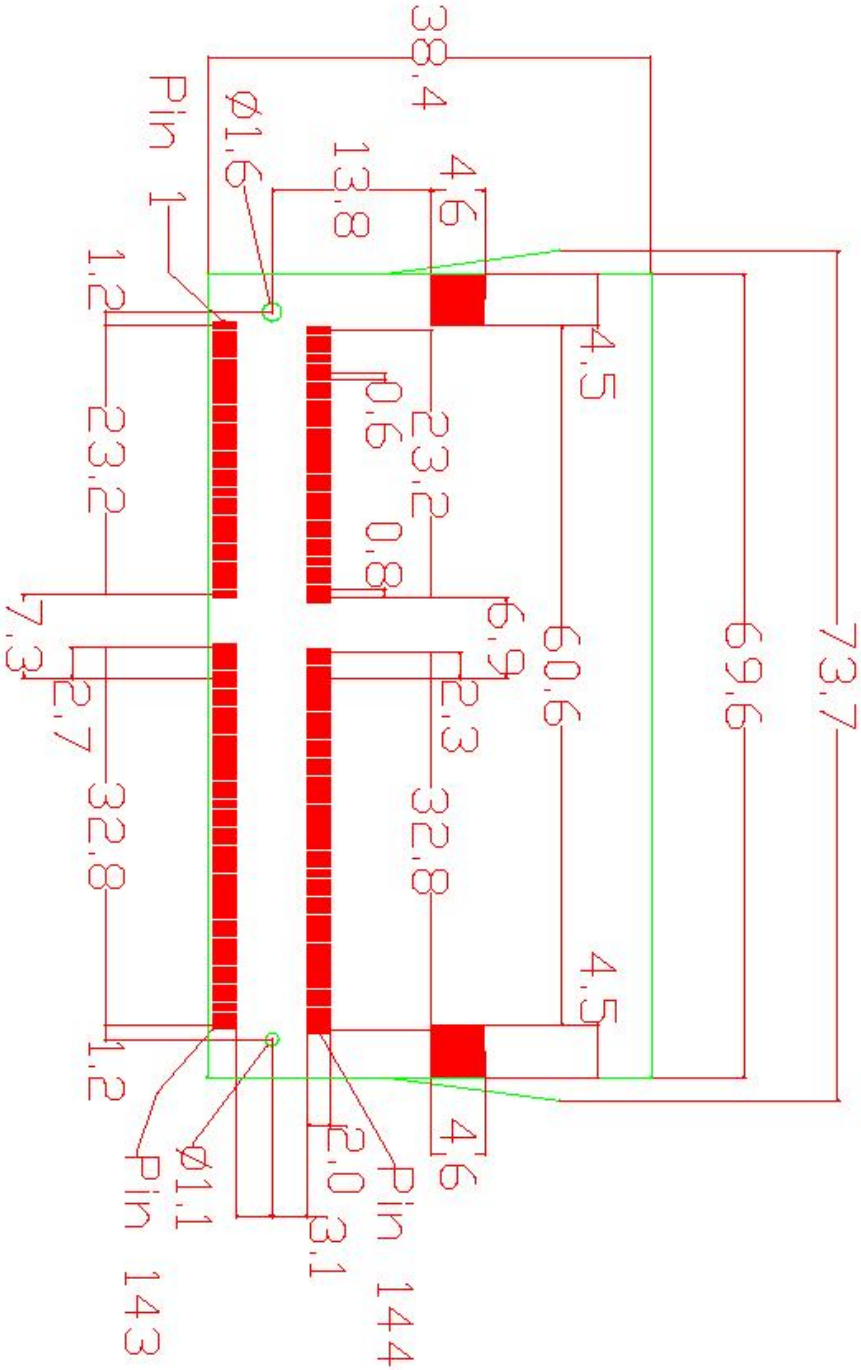

Please refer to component datasheet for more information

Artistic Licence

© Artistic Licence Engineering Ltd. 2007
24 Forward Drive
Christchurch Avenue
Harrow
Middlesex
England
HA3 8NT
Tel: +44 (0)20 88 63 45 15
Fax: +44 (0)20 84 26 05 51
Email: Sales@ArtisticLicence.com

plasa member

The information contained in this document is subject to change without notice. Artistic Licence Engineering Ltd. makes no warranty of any kind with regard to this material, including, but not limited to, the implied warranties of fitness for a particular purpose.
Artistic Licence Engineering Ltd. shall not be liable for errors contained herein or for incidental or consequential damages in connection with the furnishing, performance or use of this material. All trademarks are acknowledged.